Armstrong Micro FM Pulse Counting Receiver Kit.

It was quite a surprise whilst browsing eBay for radio kits to see this. The old Sinclair Micro FM has been reborn - well, almost! There is now a modern version available as a kit.
At the very low price it was for sale at (~$20), it was impossible to resist. In fact, it would be hard to build it with all new parts for that. In the eBay ad there was some information on the kit and a circuit included, although without component values. From this I could see that it was certainly a genuine pulse counting receiver. So, the order was placed...
I bought the kit in 2017, but checking eBay again in 2023, it appears to be no longer available.

Very professionally packaged. Assembly was quick and easy.

It didn't take very long to arrive and the excellent quality of the kit really stood out. I've built a few kits over the years and this is certainly very professional. The packaging and instructions were as they should be; I really couldn't fault anything. I had it built in about two and half hours.

Note the 1.5V operation and the loop aerial.

It went together very easily. In fact, as an example of the quality, the resistor leads were already preformed. The leads needs be cut off close to the PCB because it rests right against the plastic case. If the PCB sits too high, the earphone socket and volume control won't line up with the holes. The earphone socket has small protrusions that need to be removed for it to sit flush against the PCB.

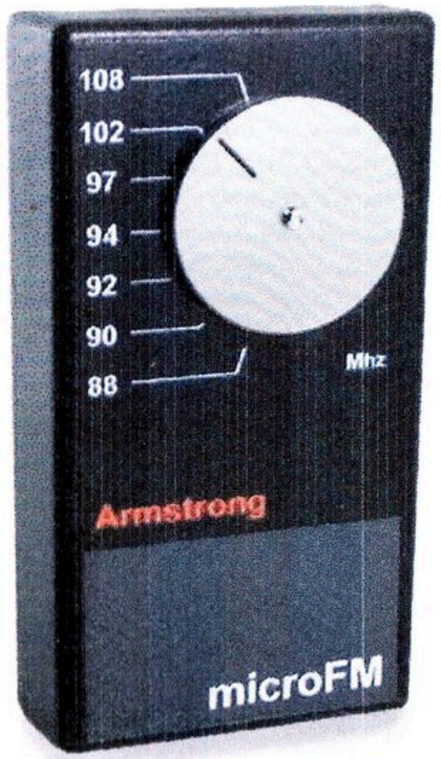

Armstrong microFM

7 transistor pulse counting superhet receiver

Assembly and operating instructions

Features

- Excellent sound quality
- Single AAA cell – over 100 hrs
- No external antenna
- Powerful AFC control
- Auto switch-on when earphones are inserted
- Simple tuning and volume control
- 7 transistor superhet design
- High sensitivity and selectivity
- No alignment necessary – single pre-formed inductor

Designed and manufactured in the EEC by Armstrong radio.

INDEX

Introduction 2
Brief History 2
Circuit description 3
Parts list 4
Assembly 5
Operation 9
Technical details 9
After sales service 9

Introduction

Welcome to Armstrong classic radio and audio kits and we trust you will enjoy building and operating your microFM receiver.

All our kits are designed from the ground up to give the true pioneering enjoyment of kits of the past and as such all our kits use:

All discrete components – no ICs
Full circuit descriptions & details
Easy to follow instructions for assembly and testing
Full after sales service, including faultfinding and repair service

Brief History

Pulse counting superhet receivers were popular in the UK during the 1960/70 period and a number of articles were published in magazines, including "Practical Wireless" and "Radio Constructor". These were ideally suited for home construction as alignment was minimal and no test instruments were necessary. Also as no IF transformers were used and most of the receiver worked at low frequencies, construction was straightforward. Added to this they offered excellent audio quality, unlike the super regenerative receivers.

A kit was also marketed by Sinclair and this inspired us to produce an up to date version of this kind of receiver.

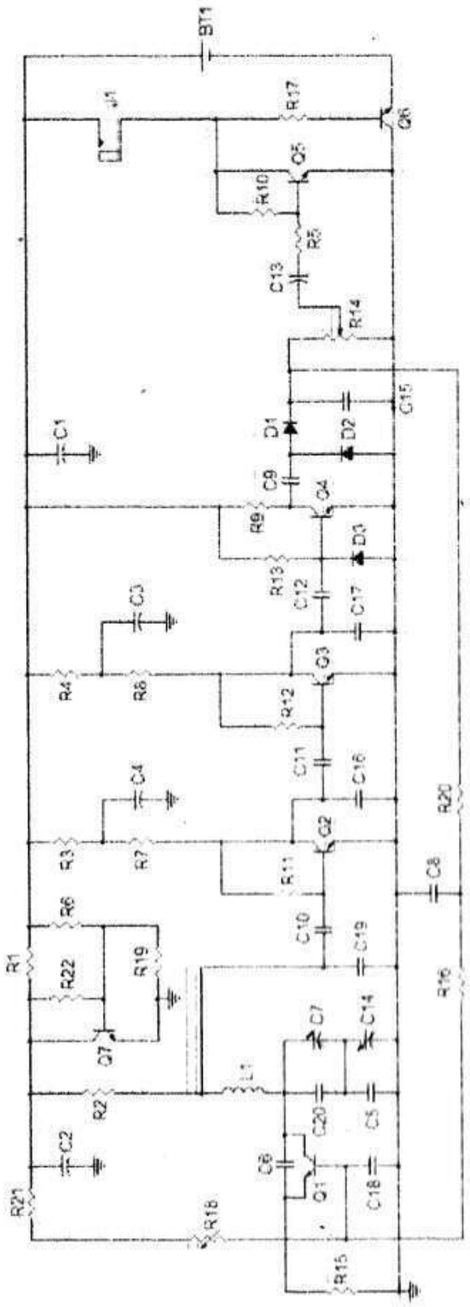

Circuit description

Q1 is arranged as a mixer oscillator where the L1 inductor is both the tuning coil and antenna. As this is operated at micro-power levels from a 1.1v source at around 100 micro-amps, noise level is minimized and an RF buffer stage is unnecessary as interference is negligible.

For this to have stable operation with minimal frequency drift a stable voltage source is essential. This is provided for by Q7 which maintains 1.15v from the 1.5v battery.

The mixer oscillator is tunable over the range 87 MHz to 108 MHz with trimmers provided for tuning dial calibration. The incoming signal mixed with the oscillator frequency provides a FM modulated IF output of around 80 kHz across C19. The AFC loop, with the values employed provides strong AFC, but also by feeding a portion of the demodulated output to the base of Q1 providing a degree of FM compression, and thus a low 80khz IF frequency is possible..

Q2 and Q3 provide the necessary gain with 2 IF stages with a centre frequency of 80 kHz. C10 lightly couples the mixer oscillator to Q2 and C11

coupling capacitor also act as a high pass filter. C16 and C17, providing the low pass filter thus controlling selectivity.

Q4 is the limiter stage providing a square wave output, and gives the necessary constant voltage output required for the pulse discriminator. Note also that R13 with D3 are set up to give a threshold limit, thus filtering substantially inter-station and AM noise.

Decoupling is provided separately on every stage of the RF and IF section to provide a stable performance. The pulse discriminator consists of C9, D1, D2, R14 and C15 with R14 doubling up as the volume control, and C15 providing the de-emphasis filter.

The resulting audio signal is amplified by Q5 which directly drives the Earphones, with the left and right connected in series, Q6 with R17 provides an electronic switch on, when the earphones are connected.

Parts list

Capacitors (Pack C)		Resistors (Pack R)	
C1	100u	R1	470r
C2	100u	R3	470r
C3	10u	R4	470r
C4	10u	R2	6k8
C5	5p6	R5	4k7
C6	3p9	R6	33k
C7	30p trimmer	R7	4k7
C8	100n	R8	4k7
C9	150p	R9	2k2
C10	150p	R17	2k2
C18	150p	R10	150k
C11	1n5	R20	220k
C12	1n5	R11	2m2
C13	1u	R12	2m2
C14	40p tuning capacitor	R13	1m
C15	22n	R14	22k volume control
C16	150p	R15	1k
C17	150p	R16	100k
C19	330p	R18	100k trimmer
C20	27p		

Resistors (contd)		Miscellaneous (Pack M)	
R19	10k	PH1	32 ohms headphones
R21	100k	B1	AAA battery holder
R22	15k	J1	3.5mm jack
		L1	6t 8mm dia
Transistors / Diodes (Pack S)		P1	PCB
		C1	Case
Q1	BF494	DL1	Dial + screws
Q2-7	BC549		
D1,D2	1N43a		
D3	1N4148		

Assembly

Skills – You need to be able to solder components onto the PCB correctly and follow the assembly procedure below.

Tools -You will need the following tools to help assemble your kit:

Soldering iron (25 to 30 watts) with small tip
Soldering Iron Stand with Moist Cleaning Sponge
Rosin-core solder intended for electronics work
Small Wire cutters
Small Phillips and Flat screw driver
Long Nose Pliers
Solder sucker (for possible mistakes)

To assemble the components to the PCB, start by soldering the smallest height components and working up progressively to the large components. Please follow the table below together with the PCB components layout which will guide you to identify and fit the components correctly. Insert and solder the components as in the sequence shown in the table.

Please take particular care that diodes, electrolytic capacitors and transistors which will only fit one way round as shown in the layout. The electrolytic capacitors C1, C2, C3, C4, and C13 must have the –ve (white band pointing to the red line shown on the diagram.

The diodes D1, D2, D3 should also have the band in the same direction as in the diagram. Note the tuning capacitor C14 must be screwed to the PCB with the screws provided.

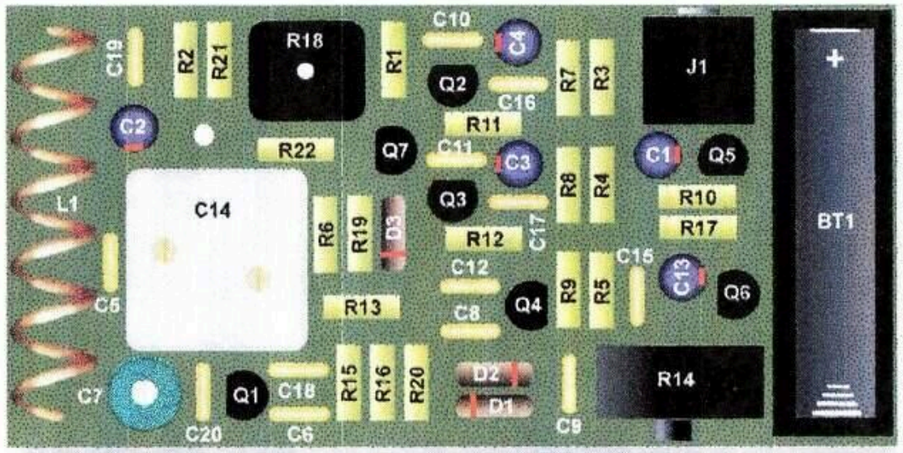

Assembly sequence

Ref on PCB layout	Value	Identification
Resistors		
R1,R3,R4	470r	Yellow, Violet, Brown
R2	6k8	Blue, Grey, Red
R6	33k	Orange, Orange, Orange
R7,R8,R5	4k7	Yellow, Violet, Red
R9,R17	2k2	Red, Red, Red
R10,R20	220k	Red, Red, Yellow
R11,R12	2m2	Red, Red, Green
R13	1m	Brown Black Green
R15	1k	Brown, Black, Red

R16,R21	100k	Brown, Black, Yellow
R18	100k preset	100k Adjustable screw
R19	10k	Brown, Black, Orange
R22	15k	Brown, Green, Orange
Transistors & diodes		
Q2,Q3,Q4,Q5,Q6,Q7	BC549	Marked BC549
Q1	BF494	Marked BF494 (red top)
D1,D2	1N43a	Glass body (long leads)
D3	1N4148	Glass body (short leads)
Capacitors		
C1,C2	100uf	Radial marked 100uf
C3,C4	10uf	Radial marked 10uf
C5	5p6	Ceramic marked 5p6
C6	3p9	Ceramic marked 3p9
C7	30p trimmer	Adjustable trimmer
C8	100n	Ceramic marked 104
C9,C10,C16,C17,C18	150p	Ceramic marked 151 or 150
C11,C12	1n5	Ceramic marked 152
C13	1uf	Radial marked 1uf
C15	22n	Ceramic marked 223
C19	330p	Ceramic marked 331 or 330
C20	27p	Ceramic marked 27p
Miscellaneous		
L1	Inductor coil	6 turn inductor
BT1	Battery holder	AAA holder
J1	3.5mm Jack	Headphone socket
R14	22k variable	22k Adj spindle
C14	40p variable	Tuning capacitor
PCB1	PC board	50mm x 100mm

Testing and set-up

First check that all components have been correctly inserted into the correct places. In addition check that diodes, electrolytic capacitors, and transistors have been inserted the right way round.

Now check all solder joints to make sure that there are no shorts or dry joints. All lead wires must be cut as short as possible to enable the PCB to fit in the case.

Fit the PCB in the case temporarily by first inserting the volume spindle. Next fit the dial and tighten the dial screw.

Adjust the preset potentiometer R18, the volume control R14 and both the trimmer C7 to the half way position. Set the tuning capacitor trimmers also to the half way position. Now insert the AAA battery into the holder paying attention to the polarity and plug the earphones in.

You should now be able to tune in a number of stations by turning the tuning dial. If not, re-adjust R18 for the loudest hissing noise on both sides of the band.

Tune to a station on the 87 MHz end and adjust the trimmer C7 so the station corresponds with the dial setting. Next tune to a station on the 107 MHz end of the band and adjust the trimmer on the back of the tuning condenser so again the stations correspond with the dial setting. If necessary repeat this process until the two ends of the band correspond to the dial setting..

Now re-adjust R18 to obtain the best performance over the complete FM band, R18 should be adjusted so both ends of the band pick up stations with the same sensitivity.

Tighten the M3 nut onto the pcb fixing screw. Now fit the lid on to the back, and tighten with the 4 black screws provided.

Your radio is now complete.

Operation

To turn on the radio, just plug in the earphones. The volume control should be set to around the half position. Now tune in the required station with the tuning dial. Please note the set is somewhat directional, so on weak stations it can be rotated for best results. Once tuned, turn the volume control to the required level. As the coil is positioned near the top of the case, it is best not to handle the radio from the top, when tuning.

To turn the radio off, please remove the earphone plug.

Technical details

Receiver type	7 transistor superhet pulse counting receiver
Tuning range	88 MHz – 108 MHz with AFC
Output	32 ohms earphone output
DC Power	AAA alkaline battery
Battery life	approx 100 hours
Controls	Tuning and volume control
Dimensions	112 mm x 58 mm x 24 mm
Finish	Black with dark grey fascia

Free full after sales and repair service

In the unlikely event you cannot get your receiver to work, we provide a full after sales service, free of charge ($5.00 is only required for shipping cost back to you by registered mail), .

We will not however accept any kits if the PCB is physically damaged beyond repair. For your safety please make sure your kit is sent well packed, with the case and earphones, to us by registered mail or other tracked service, as we do not accept responsibility for any packages lost in transit.

To use our after sales service, please contact us first at support@armstrongradio.com

Instructions for the receiver.

The Circuit.
At this point I would recommend learning about my own solid state pulse counting receiver, if you are not familiar with this method of FM reception.

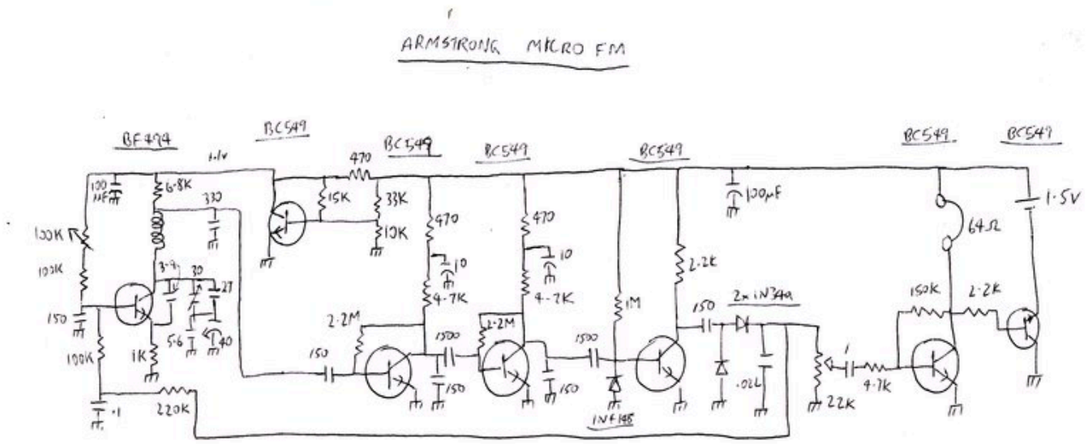

I've redrawn the circuit with component values to make it easier to understand. Two things stand out compared to the original Sinclair design. First is the operating voltage. It's only 1.5V! The Sinclair used an obscure 9V battery. This, incidentally, is the first pulse counting receiver I've seen operating at such a low voltage.
Secondly, the aerial is quite novel, using just a stretched out oscillator/aerial coil for signal pickup. In this regard it's just like a ferrite loopstick aerial used in a MW set, except it's for VHF. There is neither a telescopic aerial (like the Sinclair), or provision to use the headphone lead as an aerial. Experiments in the past have confirmed that this kind of aerial is actually quite legitimate, and it's surprising it hasn't been used more often for VHF receivers.

The coil is six turns of 1mm (approx.) diameter copper wire, with an inside diameter of 8mm. Coil is stretched out to 45mm, which is the distance between the pads on the PCB.

Apart from that, the design is largely conventional. An autodyne frequency converter of the Colpitts type converts the VHF signal to an IF of 80kHz. The two following stages determine the gain and selectivity in the usual way; i.e., the coupling and collector bypass capacitors determine the frequency response of the IF amplifier. The next transistor performs as a limiter by means of the low bias, and the diode from base to earth. The squared pulses from the collector feed the usual pulse counter circuit, consisting of two germanium diodes as a charge pump. The manual states these are 1N43a types. I think that's a typo and they're really 1N34a.
The time constant of the .022uF and 22K volume control pot average out the pulse frequency so it becomes clean audio.
After the volume control, the signal feeds a single class A amplifier transistor which drives the earphones. These are 32 ohms each, but are connected in series to present a 64 ohm load which is easier to drive. Note that the Sinclair did not include a volume control.

As with the Sinclair, plugging in the earphones turns on the reciever. However, here an electronic switch is used, instead of the modified earphone socket used by Sinclair. There is a transistor in series with the negative end of the cell (an AAA type). When earphones are plugged in, base current flows, saturating the transistor, and completing the circuit.
Note that the earphones must have DC continuity for this to work. A crystal earphone won't work, and nor will a feed to an external audio amplifier, unless a suitably low resistor is connected in parallel.

It is pointed out in the notes that by operating the receiver at only 1.5V, radiation from the oscillating aerial coil is minimised. The supply to the mixer/oscillator is regulated by another transistor in a shunt regulator circuit, so that a stable 1.1V is provided to reduce drift.

Like the Sinclair, AFC is provided by taking the DC from the detector output and using it to control the bias of the oscillator, which then alters the frequency. This is done by the 220K resistor and .1uF condenser. Mention is made of frequency compression like the Philips TDA7000 IC uses. Essentially, by modulating the local oscillator frequency with the demodulated audio, it is possible to use an IF of less than the maximum frequency deviation of the FM signal. The notes claim an IF of 80kHz. However, I fail to see how this could work effectively with the long time constant of the 220K and .1uF. That would surely filter out most of the higher frequency audio components. I must point out I haven't actually measured its effectiveness.

Shown for comparision with the original Sinclair design.

Performance.

Alignment was straight forward, but having a R&S SMS signal generator helped. Like other VHF transistor autodyne converters, the bias is important, and here a 100K preset adjusts the optimum level. It is a compromise because performance varies from one end of the band to other. Like other receivers I've experimented with using this type of converter, it was found best to set it for best sensitivity at the low end of the band.

And the aerial? Yes, it actually works very well. At 80km from the main Sydney stations, and further from the Central Coast stations, there is no problem receiving them. Like any loop aerial it is directional. The sensitivity is less than my own design with a telescopic aerial and RF amplifier, but that's to be expected obviously. It is certainly not a DX receiver, but it receives all the stations in the intended broadcast area very well.

The sound contains more bass than I would like, and this appears to be due mainly to the supplied earphones. I tried different types of conventional design and found the frequency response somewhat better. Incidentally, the hole in the side of the case is too small to fit anything but a very narrow plug, so will have to be enlarged to use other types of headphones.

All in all, I highly recommend this kit for anyone interested in pulse counting FM receivers. It works well, and the price is unbeatable.

Home

email: cablehack@yahoo.com